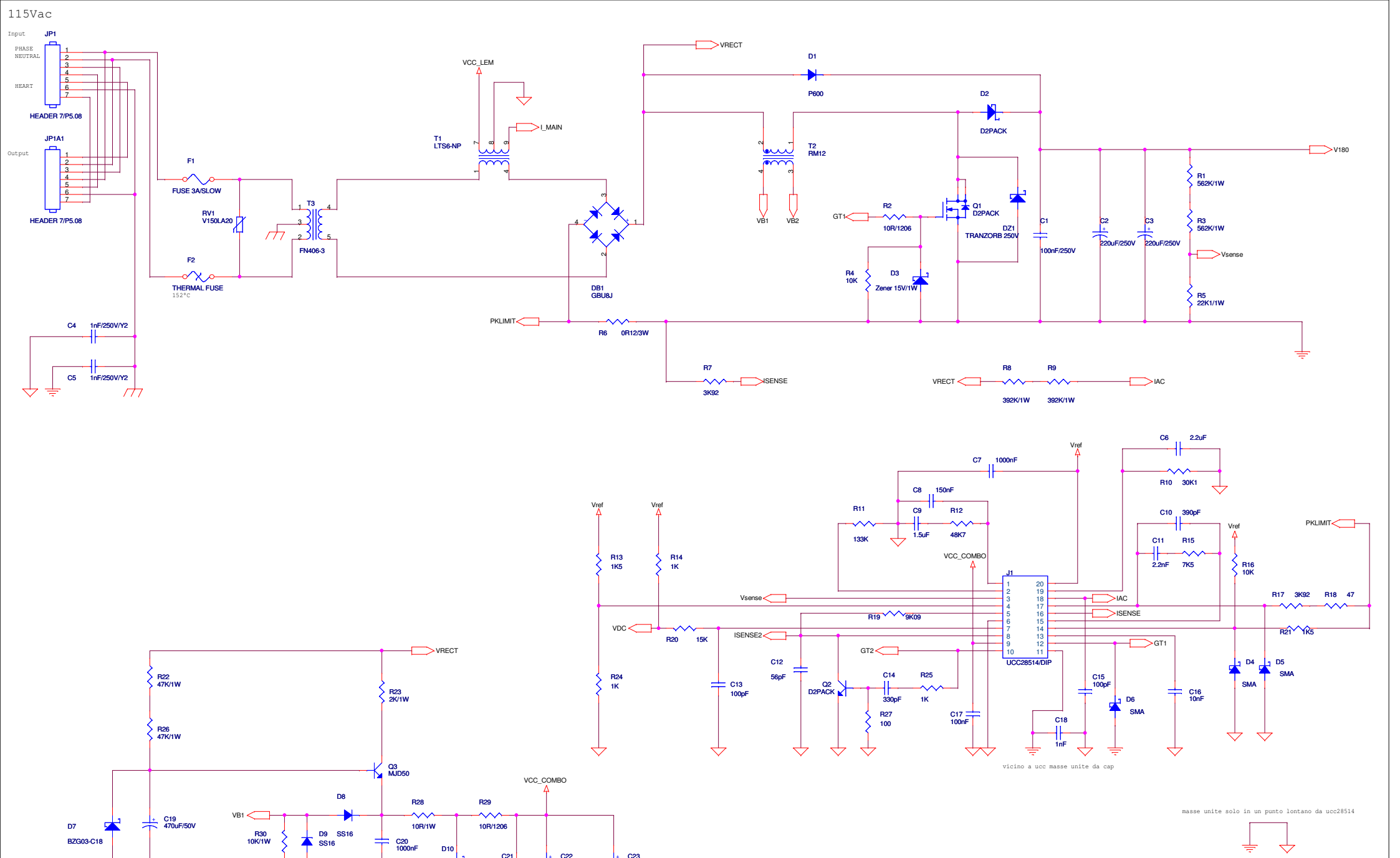

EMCelettronica Srl

Title: RECT + PFC

Size	Document Number	Rev
A4	POWER.dsn	A

Date: Monday, September 10, 2007 Sheet 1 of 2

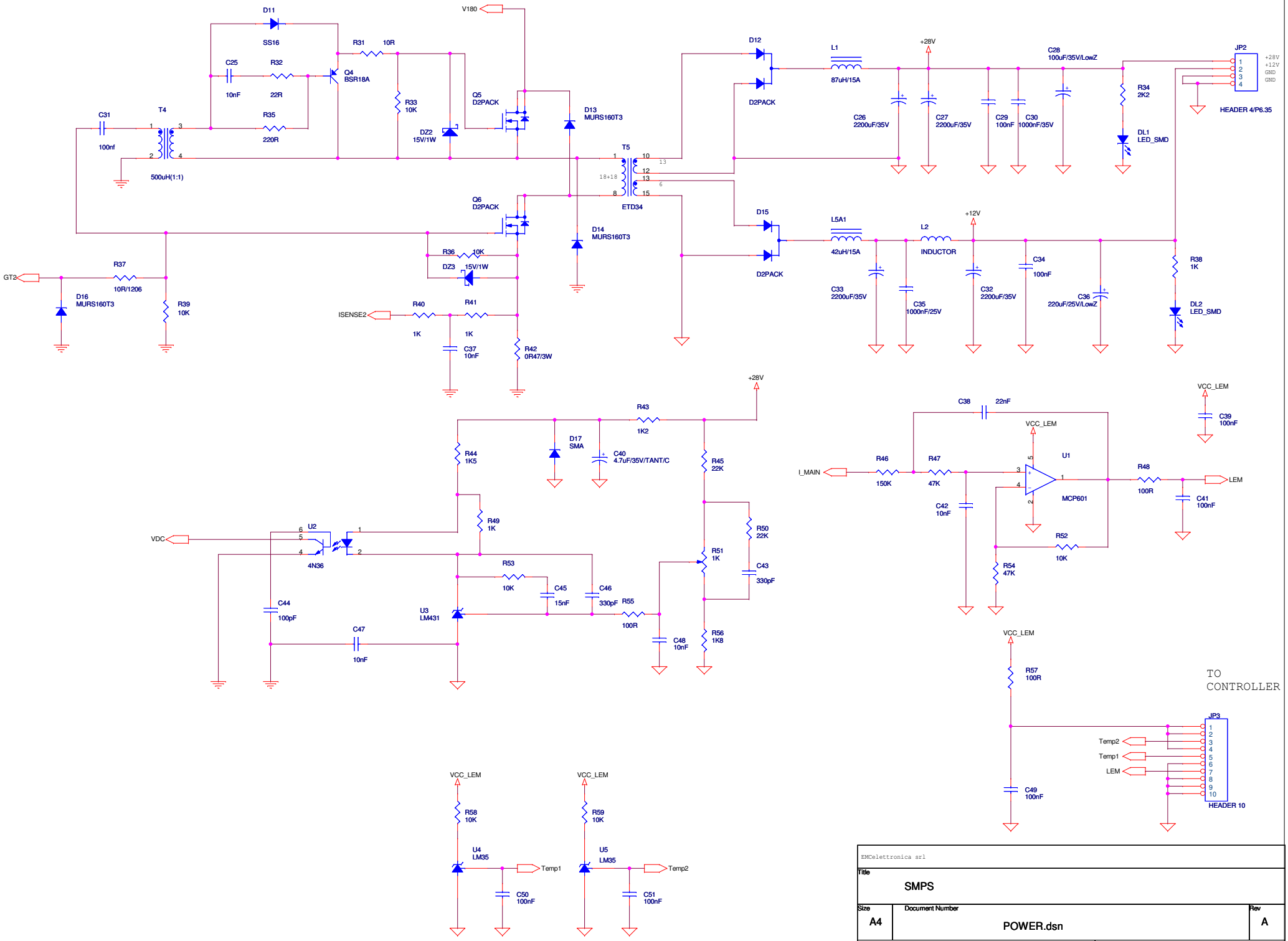

EMCelettronica srl

Title: SMPS

Size	Document Number	Rev
A4	POWER.dsn	A

Date: Monday, September 10, 2007 Sheet 2 of 2